Buyer: PRL
Season : FA 26
Fit: Custom Fit

Technical Sheet - Pre run

Order No: PRLS/25- 13273

Style:710953355 Flannel CU BD PPC SPT

Washing: Yes

Special Instructions : SPI - 16, Button Stitch 8X8.

Modified On:3rd-Feb- 2026

Modified By : John

Aesthetics comments (Sm4):
1) Labels used actual
2) Button used actual
3) EMB colour and design ok
4) PPs wash ok

Sample date: 26-03-2025
Board # Z254SC53 -710953355 -CUBDPPCS
Factory : LAGUNA CLOTHING
Type of Sample : PPS
Fit Model : Mannequin
Sealer no.: PP024069

Fit comments:
-All measurements within tolerance.

Workmanship comment:
- Last button placement is +1/4. BTS
- Collar length at seam is +1/4.BTS.
- Sleeve Pleat placement should be 5/8” from placket, pleat depth of 1st pleat to end where 2nd pleat starts. Pleats to be 1/2” max to center fold
-Observed slightly stretched at WLS collar attach neck seam area. need to taken care in bulk.
-Observed slight roping at curved bottom hem. Need to taken care while stitching, do not stretched.
- Observed tent at back yoke seam on armhole joint.

All trims actual except wash-care label
Non Fusible interlining used at Collar, cuff, neckband, and front placket.

Buyer: PRL
Season : FA 26
Fit: Custom Fit

Technical Sheet - Pre run

Order No: PRLS/25- 13273

Style:710953355 Flannel CU BD PPC SPT

Washing: Yes

Special Instructions : SPI - 16, Button Stitch 8X8.

Modified On:3rd-Feb- 2026

Modified By : John

ROUND CUFF

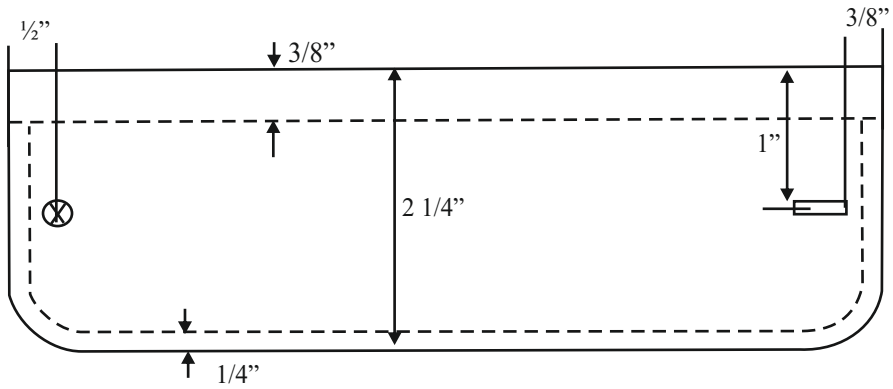

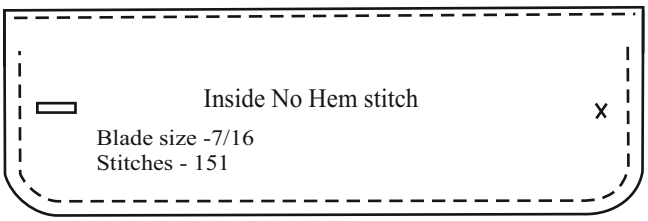

17L-1 buttons

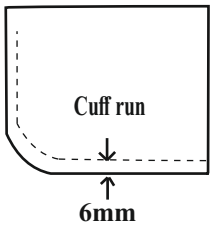

*B/H blade size according to btn size

SLEEVE PLACKET

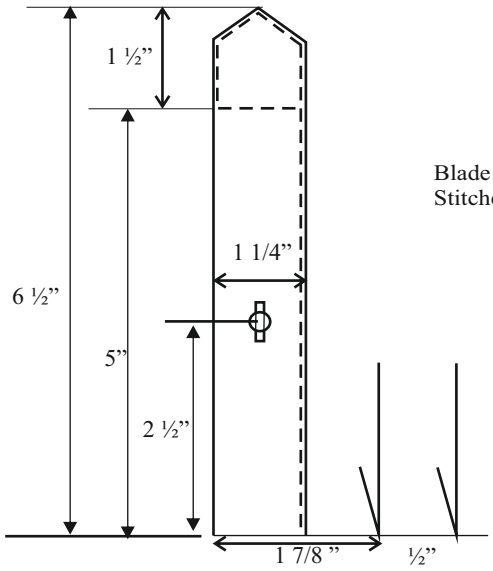

Pleat
depth - 1/2"

Blade size -3/8"
Stitches - 129

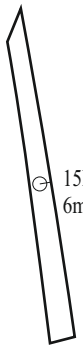

Small slv plkt width-1/2"

* Before Sleeve placket attaching both side Sleeves, **Do 5mm bite Over lock**

* Before cuff attaching both side Sleeves, **Do 8mm bite Over lock**

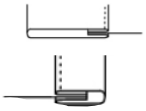

Interlining
Collar Skin- T88ES
Cuff -P64
Neck Band - P37
Front Placket- P64

Button(**)**
Front : 6, 17L
N Band : 1, 17L
Cuff : 1+1, 17L
Slv Plkt : 1+1, 15L
Spare : 1-17L, 1-15L,1- 13L
Collar points:1+1,13L

Button shanking S/B 2mm

Buyer: PRL
Season : FA 26
Fit: Custom Fit

Technical Sheet - Pre run

Order No: PRLS/25- 13273

Style:710953355 Flannel CU BD PPC SPT

Washing: Yes

Special Instructions : SPI - 16, Button Stitch 8X8.

Modified On:3rd-Feb- 2026

Modified By : John

FRONT

EMB pos frm shoulder seam to center of Logo

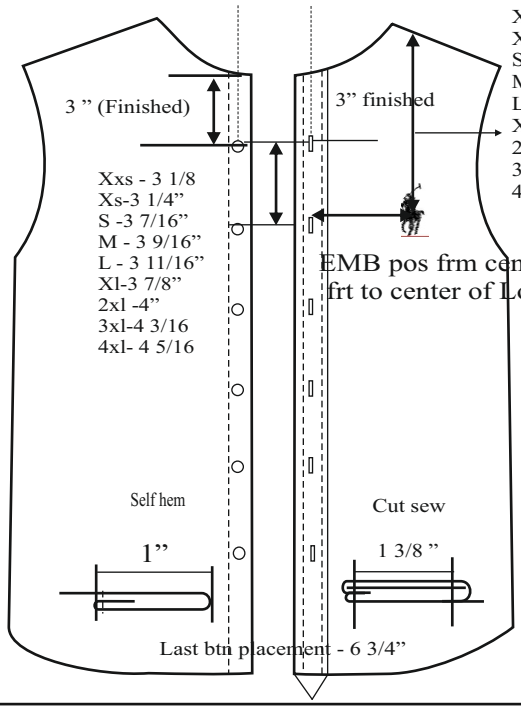

Xxs - 7"
Xs-7 1/4"
S -7 1/2"
M - 7 3/4"
L - 8 "
Xl-8 1/4"
2xl -8 ½"
3xl- 8 3/4
4xl-9

EMB Height 1 1/16'

Xxs - 3 3/4"
Xs -3 7/8"
S- 4"
M - 4 1/8"
L - 4 3/8"
Xl - 4 5/8"
Xxl- 4 7/8"
3xl- 5 1/8
4xl- 5 3/8

*B/H blade size according to btn size

Raw Neck

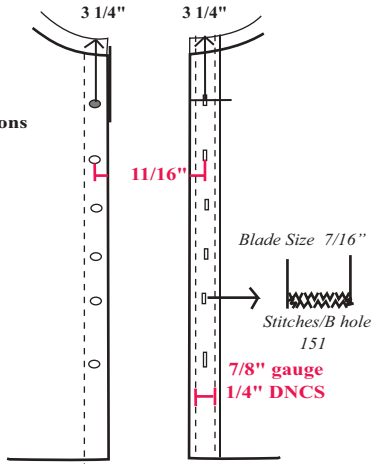

(17L) buttons
6 Nos

* Spare button on Side seam

SPLIT YOKE

Main lab-4-side stitch

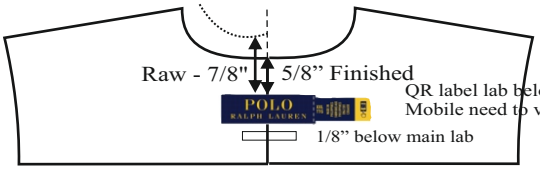

Secondary lab-
2-side stitch

Custom FIT

QR label

Size lab

*Label attaching Needle size -7

*** When fabric is light color and label is dark color bobbin thread should be skala 360**

SPLIT BACK YOKE

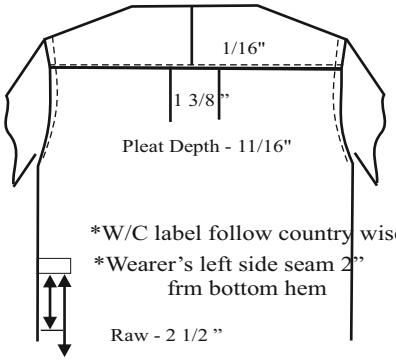

inner view

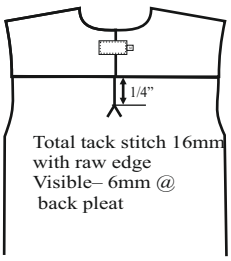

*Yoke attaching

O/L then top stitch

Interlining
Collar Skin- T88ES
Cuff -P64
Neck Band - P37
Front Placket- P64

Button(**)**
Front : 6, 17L
N Band : 1, 17L
Cuff : 1+1, 17L
Slv Plkt : 1+1, 15L
Spare : 1-17L, 1-15L,1- 13L
Collar points:1+1,13L

Button shanking S/B 2mm

Buyer: PRL
Season : FA 26
Fit: Custom Fit

Technical Sheet - Pre run

Order No: PRLS/25- 13273

Style:710953355 Flannel CU BD PPC SPT

Washing: Yes

Special Instructions : SPI - 16, Button Stitch 8X8.

Modified On:3rd-Feb- 2026

Modified By : John

COLLAR

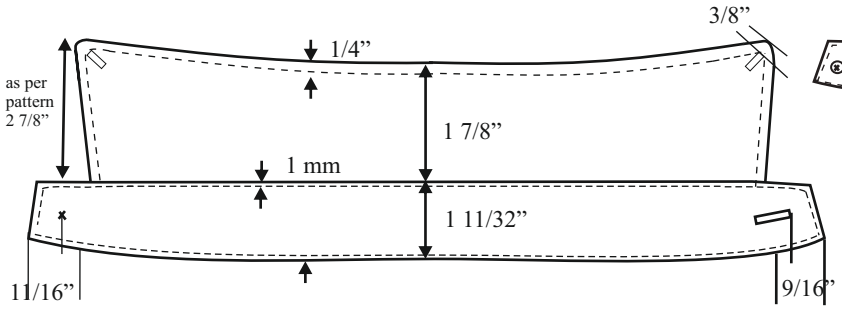

Blade Size 1/2”

Stitches/ B Hole 151

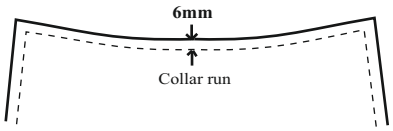

Btn Dwn Placement

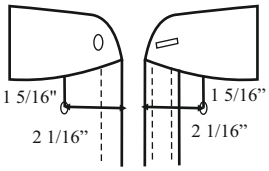

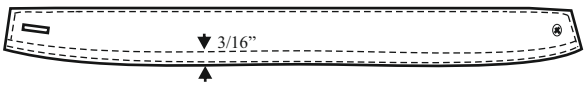

* Pick attach to be reverse side top neck Band to be fused
*Self fab with Grommet (Ft600) required for btn down

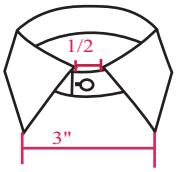

Btn down blade size- 5/16’
btn down btn size-13L
Btn down B/H Stitches-125

*B/H blade size according to btn size

ASSEMBLY

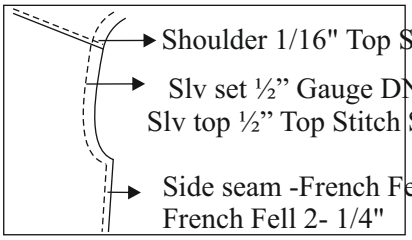

Shoulder 1/16" Top Stitch

Slv set ½” Gauge DNCS
Slv top ½” Top Stitch SNLS

Side seam -French Fell 1- 7mm
French Fell 2- 1/4"
(Side seam stating frm slv side like jeager)
Left stitch on back right on frt

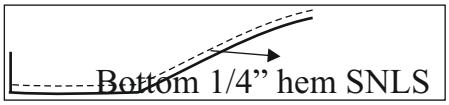

Bottom 1/4” hem SNLS

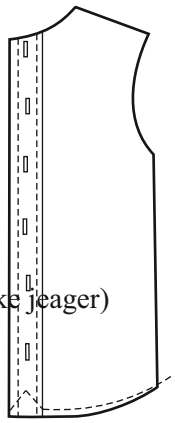

V Patch @ front plkt

*Shoulder attaching - 10mm
Collar attaching - 7mm

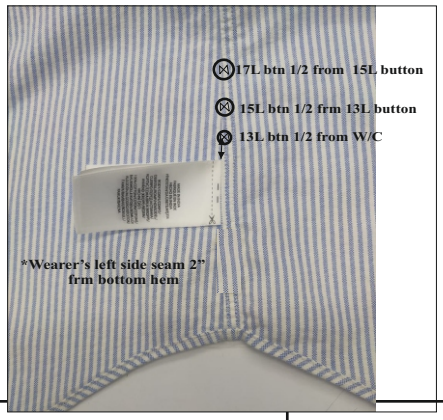

* Before Sleeve placket attaching both side Sleeves, **Do 5mm bite Over lock**

* Before cuff attaching both side Sleeves, **Do 8mm bite Over lock**

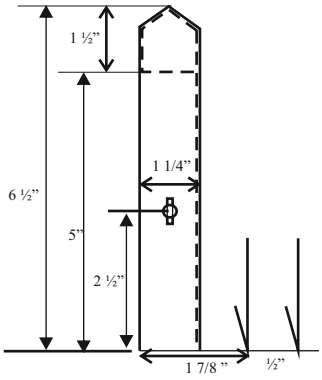

Pleat depth - 1/2"

Interlining
Collar Skin- T88ES
Cuff -P64
Neck Band - P37
Front Placket- P64

Button(**)**
Front : 6, 17L
N Band : 1, 17L
Cuff : 1+1, 17L
Slv Plkt : 1+1, 15L
Spare : 1-17L, 1-15L,1- 13L
Collar points:1+1,13L

Button shanking S/B 2mm